Rolled Ball Screws

Code	Type	Accuracy Grade	Material		Heat Treatment		Hardness	
			Screw Shaft	Nut	Screw Shaft	Nut	Screw Shaft	Nut
LCD02	Standard Nut Type	C7	S55C	SCM415H	Induction Hardened	Carburized	58～62HRC	58～62HRC

Yiheda doesn't guarantee the dB value after ball screw assembled.

Shaft Dia. 8 · Lead 2/2A

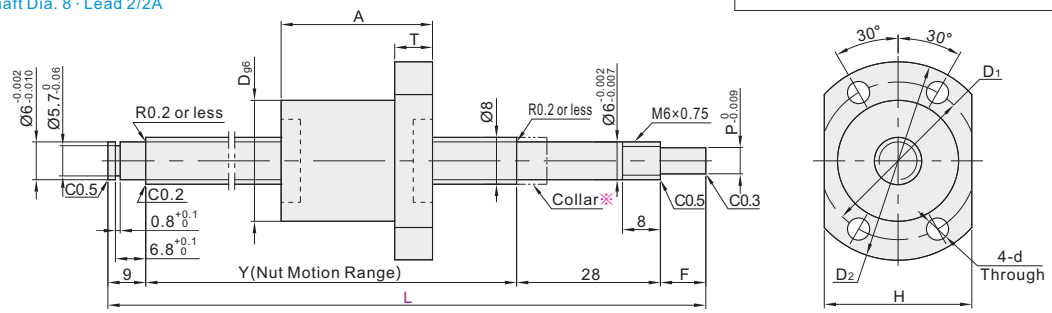

※ Please use the collar that matches the Combination with Support Units.
This rolled ball screws include collar.

Shaft Dia. 10 · Lead 2

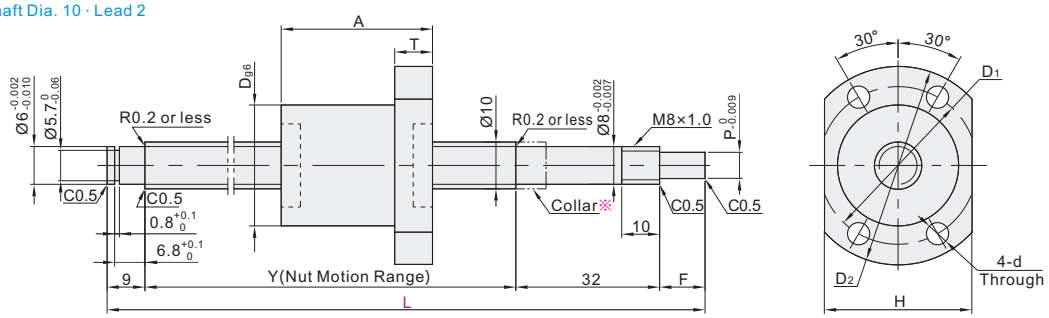

※ Please use the collar that matches the Combination with Support Units.
This rolled ball screws include collar.

Shaft Dia. 10 · Lead 4

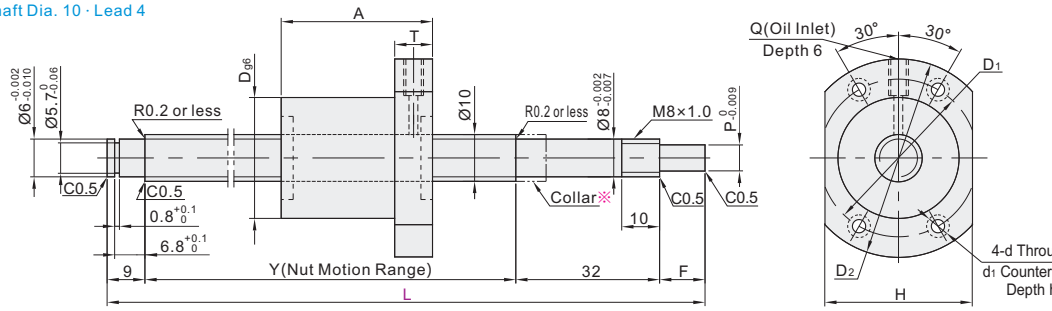

※ Please use the collar that matches the Combination with Support Units.
This rolled ball screws include collar.

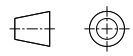

The first perspective

Part Number			1mm Inc.	F	P	Ball Dia.	Number of Circuits	Twisting Direction	Y	D	A	T	D1	D2	H	d	d1	h	Q	Basic Load Rating (KN)	
Code	Screw Shaft O.D.	Lead	L																	C(Dynamic)	Co(Static)
LCD02	8	2A	100~400	7.5	4.5	1.2	3	Right	L-44.5	14	16	4	21	27	18	3.4	—	—	—	2.18	4.49
		2								16	26		23	29	20					1.32	2.21
	10	2	150~600						L-48.5	18	28	5	27	35	22	4.5				1.81	2.99
		4				2				26	34	10	36	46	28		8	4.5	M6	3.87	5.79

Combination with Support Units

Code	Screw Shaft O.D.	Lead	Shape	Recommended Fixed Side (Page)	Recommended Support Side (Page)
LCD02	8	2A	Round	LEB01-6 (P1461)	LEB11-6 (P1463)
		2	Square	LEB21-6 (P1465)	LEB31-6 (P1467)
				LEB41-6 (P1469)	
	10	2	Round	LEB01-8 (P1461)	LEB11-6 (P1463)
		4	Square	LEB21-8 (P1465)	LEB31-8 (P1467)
				LEB41-8 (P1469)	

Combination with Nut Brackets

Part Number			Nut Brackets	
Code	Screw Shaft O.D.	Lead	Code	No.
LCD02	8	2(2A)	LFF01	0802
	10	2	LFF02	1002
		4	LFF06	1004

Please order as shown

Part Number			1mm Inc.	F	P
Code	Screw Shaft O.D.	Lead	L		
LCD02	8	2	100~400	7.5	4.5
	10	2	150~600		
	10	4			

LCD02—8—2—L300

Optional Processing

Discount price

Per	1~4	5~
Price	100%	Additional quotation

Optional Processing

Part Number			1mm Inc.	Optional Processing Code
Code	Screw Shaft O.D.	Lead	L	
LCD02	8	2	100~400	LA LB LC LE( ) LF LJ( ) LK( )
	10	2	150~600	LA LB LC LE( ) LF LG( ) LH( ) LJ( ) LK( )
		4		

LCD02—8—2—L300—LE15

Delivery 8

Optional processing (Only applicable to Screw shaft diameter 8)

Code	Spec.	
LA	**No Machining on Support Side Shaft End** (Support Side) (Fixed Side) L	Ordering Code LA
LB	**Ball Nut Orientation Reversed** (Support Side) (Fixed Side) Standard Changed	Ordering Code LB
LC	**No Retaining Ring Groove on Support Side Shaft End** (Support Side)	Ordering Code LC
LE( )	**Change Support Side Shaft End Length** (Support Side) 6.8 LE( )	Ordering Code LE15 1mm Increment LE Value range:10~20. L remains unchanged,Y dimension is shortened.

Code	Spec.	
LF	**Wrench Flats on Fixed Side** (Fixed Side) $5^{0}_{-0.2}$ 4 4 (18) Incomplete Hardened Area	Ordering Code LF The processing of wrench groove will shorten the screw rod stroke. Ball bearings will fall out if the ball nut crosses the wrench flats.
LJ( )	**Flat Machined on Fixed Side Shaft End** (Fixed Side) 0.5 LJ( )	Ordering Code LJ10 1mm Increment LJ Value range:5~12.
LK( )	**2 Flats Machined on Fixed Side Shaft End** 0.5 0.5 LK( ) 90° Position (Fixed Side)	Ordering Code LK8 1mm Increment LK Value range:5 or less.

Optional processing (Only applicable to Screw shaft diameter 10)

Code	Spec.	
LA	**No Machining on Support Side Shaft End** (Support Side) (Fixed Side) L	Ordering Code LA
LB	**Ball Nut Orientation Reversed** (Support Side) (Fixed Side) Standard Changed	Ordering Code LB
LC	**No Retaining Ring Groove on Support Side Shaft End** (Support Side)	Ordering Code LC Combination with LE is not available.
LE( )	**Change Support Side Shaft End Length** (Support Side) 6.8 LE( )	Ordering Code LE15 1mm Increment LE Value range:11~20. L remains unchanged,Y dimension is shortened.

Code	Spec.	
LF	**Wrench Flats on Fixed Side** (Fixed Side) $8^{0}_{-0.2}$ 5 5 (20) Incomplete Hardened Area	Ordering Code LF The processing of wrench groove will shorten the screw rod stroke. Ball bearings will fall out if the ball nut crosses the wrench flats.
LG( )	**Keyway on Fixed Side Shaft End** $2^{-0.004}_{-0.029}$ (Fixed Side) 1.2 LG( )	Ordering Code LG8 Adds a keyway on the fixed side shaft end. 1mm Increment
LH( )	**Keyway on Fixed Side Shaft End** (Fixed Side) LH( ) S	Ordering Code LH5-S2 Adds a keyway at a customer specified area on the fixed side shaft end. 1mm Increment Referring to P1414 for Detailed Keyway Dimensions.
LJ( )	**Flat Machined on Fixed Side Shaft End** (Fixed Side) 0.5 LJ( )	Ordering Code LJ10 1mm Increment
LK( )	**2 Flats Machined on Fixed Side Shaft End** 0.5 0.5 LK( ) LK( ) 90° Position (Fixed Side)	Ordering Code LK8 1mm Increment

Shaft Dia. 12, Lead 4/5/10

Standard Nut Type

Code	Type	Accuracy Grade	Material		Heat Treatment		Hardness	
			Screw Shaft	Nut	Screw Shaft	Nut	Screw Shaft	Nut
LCH02	Standard Nut Type	C7	S55C	SCM415H	Induction Hardened	Carburized	58～62HRC	58～62HRC

Yiheda doesn't guarantee the dB value after ball screw assembled.

Lead 4/5

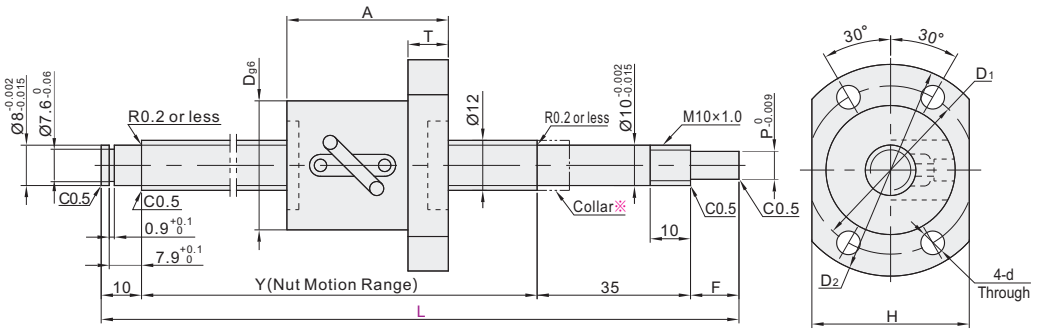

※ Please use the collar that matches the Combination with Support Units.
This rolled ball screws include collar.

Lead 10

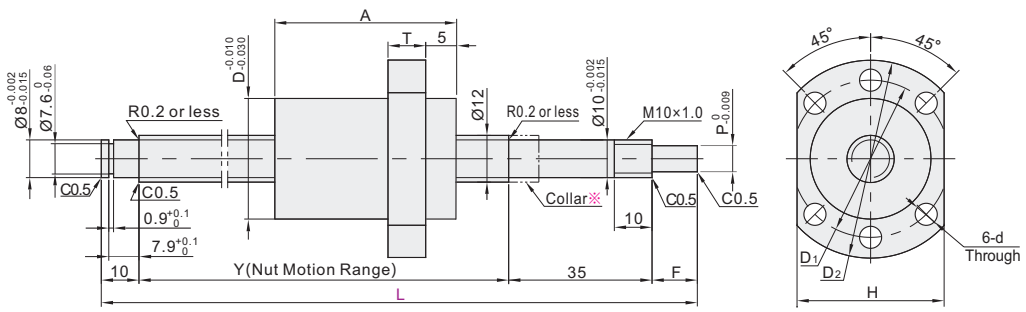

※ Please use the collar that matches the Combination with Support Units.
This rolled ball screws include collar.

Lead 10A/10B

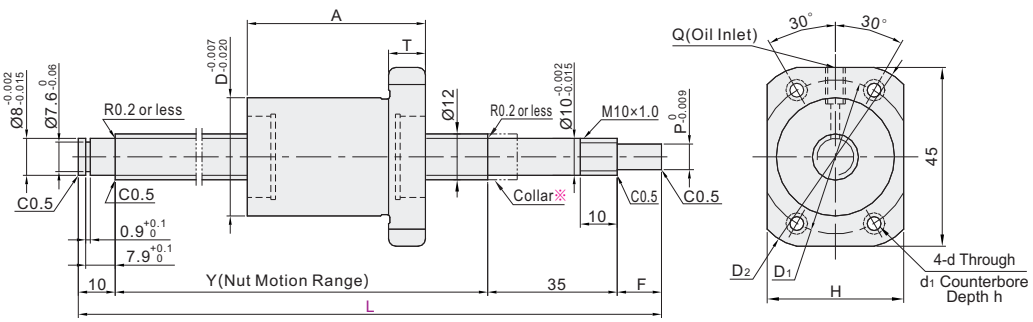

※ Please use the collar that matches the Combination with Support Units.
This rolled ball screws include collar.

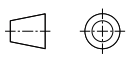

The first perspective

Shaft Dia. 12, Lead 4/5/10

Standard Nut Type

Part Number			1mm Increment	F	P	Ball Dia.	Number of Circuits	Twisting Direction	Y	D	A	T	D_1	D_2	d	d_1	h	H	Q	Basic Load Rating (KN)	
Code	Screw Shaft O.D.	Lead	L																	C(Dynamic)	Co(Static)
LCH02	12	4	150~800	15	8	2.381	3.5	Right	L-60	28	35	6	39	48	5.5	—	—	30	—	4.17	7.24
		5				2														6.49	10.15
		10				2.5	2.8			24	42		32	40						6.29	12.61
		10A				2	2			30	40	10	40	50	4.5	8	4.5	32	M6	2.45	4.04
		10B				2.5	2.7				53										

Combination with Support Units

Code	Screw Shaft O.D.	Lead	Shape	Recommended Fixed Side(Page)	Recommended Support Side(Page)
LCH02	12	4 5 10	Round	LEB01-10(P1461)	LEB11-10(P1463)
		10A	Square	LEB21-10(P1465)	LEB31-10(P1467)
		10B		LEB41-10(P1469)	

Combination with Nut Brackets

Part Number			Nut Brackets	
Code	Screw Shaft O.D.	Lead	Code	No.
LCH02	12	4	LFF01 LFF02 LFF06	1204

Optional Processing

Code	Spec.		Code	Spec.	
LA	**No Machining on Support Side Shaft End** (Support Side) (Fixed Side) L	Ordering Code LA	LF	**Wrench Flats on Fixed Side** (Fixed Side) 8 0 -0.2 5 5 (20) Incomplete Hardened Area	Ordering Code LF ! Ball bearings will fall out if the ball nut crosses the wrench flats.
LB	**Ball Nut Orientation Reversed** (Support Side) (Fixed Side) Standard Changed	Ordering Code LB	LG( )	**Keyway on Fixed Side Shaft End** (Fixed Side) LG( )	Ordering Code LG8 ! 1mm Increment ! Referring to P1414 for Detailed Keyway Dimensions.
LC	**No Retaining Ring Groove on Support Side Shaft End** (Support Side)	Ordering Code LC ! Combination with LE is not available.	LH( )	**Keyway on Fixed Side Shaft End** (Fixed Side) LH( ) S	Ordering Code LH5-S2 ! 1mm Increment ! Referring to P1414 for Detailed Keyway Dimensions.
LD( )	**Change Support Side Shaft End Machining** (Support Side) Qhr LD( )	Ordering Code LD20-Q6 ! Q8 Changed to Q6	LJ( )	**Flat Machined on Fixed Side Shaft End** (Fixed Side) 0.5 LJ( )	Ordering Code LJ6 ! 1mm Increment
LE( )	**Change Support Side Shaft End Length** (Support Side) 7.9 LE( )	Ordering Code LE15 ! 1mm Increment ! LE value range:11~20. ! L remains unchanged, Y dimension is shortened.	LK( )	**2 Flats Machined on Fixed Side Shaft End** (Fixed Side) 0.5 0.5 LK( ) LK( ) 90° Position	Ordering Code LK8 ! 1mm Increment ! LK≤5

Please order as shown

Part Number			L
Code	Screw Shaft O.D.	Lead	
LCH02	12	4 10	150~800

LCH02 — 12 — 4 — L300

Optional Processing

Part Number			L	Optional Processing Code
Code	Screw Shaft O.D.	Lead		
LCH02	12	4 10	150~800	LA LB LC LD LE( ) LF LG( ) LH( ) LJ( ) LK( )

LCH02 — 12 — 4 — L300 — LB

Discount price

Per	1~4	5~
Price	100%	Additional quotation

Delivery 8

Code	Type	Accuracy Grade	Material		Heat Treatment		Hardness	
			Screw Shaft	Nut	Screw Shaft	Nut	Screw Shaft	Nut
LCP02	Standard Nut Type	C7	S55C	SCM415H	Induction Hardened	Carburized	58～62HRC	58～62HRC

Yiheda doesn't guarantee the dB value after ball screw assembled.

Lead 5/10

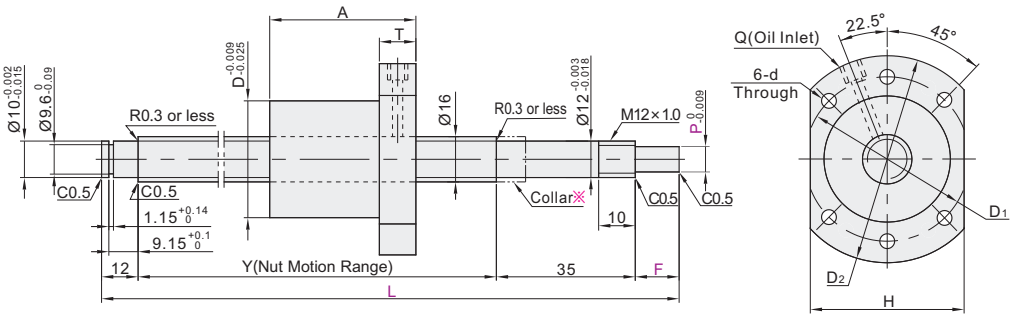

※Please use the collar that matches the Combination with Support Units.
This rolled ball screws include collar.

Lead 16

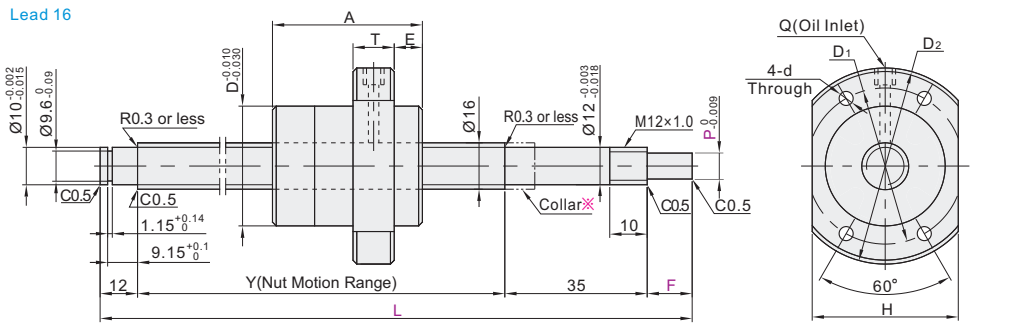

※Please use the collar that matches the Combination with Support Units.
This rolled ball screws include collar.

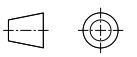
The first perspective

Part Number			1mm Increment			Ball Dia.	Number of Circuits	Twisting Direction	Y	D	A	T	D1	D2	H	d	E	Q	Basic Load Rating (KN)	
Code	Screw Shaft O.D.	Lead	L	F	P														C(Dynamic)	Co(Static)
LCP02	16	5	150~1200	15~30	6~10	3.175	4	Right	L-(47+F)	28	45	10	38	48	40	5.5	—	M6	13.5	29.9
		10	200~1200				3				57								10.8	23.5
		16				2.778	1.8×2			32	45		42	53	34	4.5	10.1		10.01	23.62

Combination with Support Units

Code	Screw Shaft O.D.	Lead	Shape	Recommended Fixed Side(Page)	Recommended Support Side(Page)
LCP02	16	5	Round	LEB01-12 (P1461)	LEB11-12 (P1463)
		10	Square	LEB21-12 (P1465)	LEB31-12 (P1467)
		16		LEB41-12 (P1469)	

Combination with Nut Brackets

Part Number			Nut Brackets	
Code	Screw Shaft O.D.	Lead	Code	No.
LCP02	16	16	LFF01 LFF02 LFF06	1616


Please order as shown

Part Number			1mm Increment		
Code	Screw Shaft O.D.	Lead	L	F	P
LCP02	16	5	150~1200	15~30	6~10
		10	200~1200		

LCP02—16—5—L300—F15—P8

Discount price

Per	1~4	5~
Price	100%	Additional quotation

Optional Processing

Code	Spec.	
LA	**No Machining on Support Side Shaft End** (Support Side) (Fixed Side) 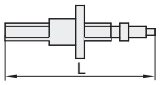 	Ordering Code LA
LB	**Ball Nut Orientation Reversed** (Support Side) (Fixed Side) Standard Changed 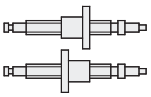	Ordering Code LB
LC	**No Retaining Ring Groove on Support Side Shaft End** (Support Side) 	Ordering Code LC
LD( )	**Change Support Side Shaft End Machining** (Support Side) 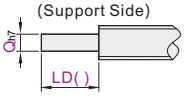 	Ordering Code LD20-Q8 1mm Increment Q10 is changed to Q8 or Q12.
LE( )	**Change Support Side Shaft End Length** (Support Side) 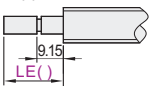 	Ordering Code LE15 1mm Increment LE value range:13~30. L remains unchanged, Y dimension is shortened.
LN( )	**Tapped Hole on Support Side Shaft End** (Support Side) 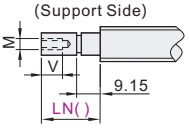 	Ordering Code LN20 1mm Increment LN value range: 10~20. L remains unchanged, Y dimension is shortened. M: M5×0.8 V: 12

Code	Spec.	
LF	**Wrench Flats on Fixed Side** (Fixed Side) 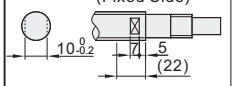 Incomplete Hardened Area	Ordering Code LF 1mm Increment
LG( )	**Keyway on Fixed Side Shaft End** (Fixed Side) 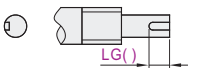 	Ordering Code LG10 1mm Increment Referring to P1414 for Detailed Keyway Dimensions.
LH( )	**Keyway on Fixed Side Shaft End** (Fixed Side) 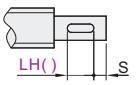 	Ordening Code LH5-S2 1mm Increment Referring to P1414 for Detailed Keyway Dimensions.
LJ( )	**Flat Machined on Fixed Side Shaft End** (Fixed Side) 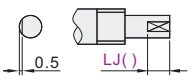 	Ordering Code LJ10 1mm Increment
LK( )	**2 Flats Machined on Fixed Side Shaft End** (Fixed Side) 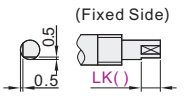 90° Position	Ordering Code LK10 1mm Increment LK≤5

Please order as shown

Optional Processing

Part Number			1mm Increment			Optional Processing Code
Code	Screw Shaft O.D.	Lead	L	F	P	
LCP02	16	5	150~600	15~30	6~10	LA LB LC LD( ) LE( ) LN( ) LF LG( ) LH( ) LJ( ) LK( )
		10	200~1200			

LCP02—16—5—L300—F15—P8—LH5-S2

Shaft Dia. 20, Lead 5/10/20

Standard Nut Type

Code	Type	Accuracy Grade	Material		Heat Treatment		Hardness	
			Screw Shaft	Nut	Screw Shaft	Nut	Screw Shaft	Nut
LCS02	Standard Nut Type	C7	S55C	SCM415H	Induction Hardened	Carburized	58~62HRC	58~62HRC

Yiheda doesn't guarantee the dB value after ball screw assembled.

Lead 5

P	Tol.
8~10	0 / -0.009
11·12	0 / -0.011

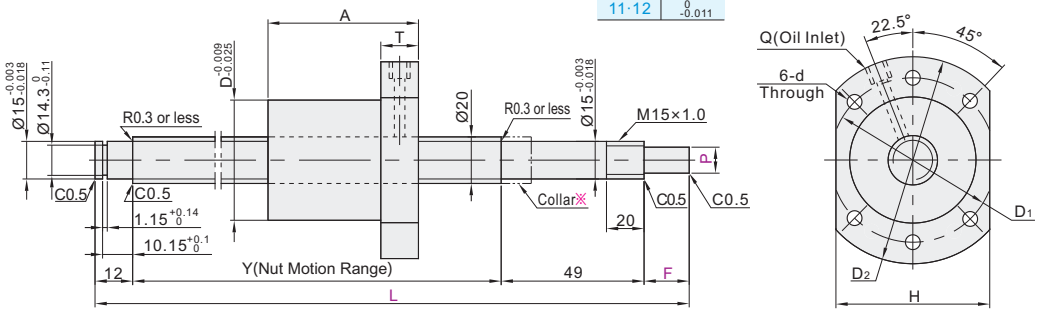

※ Please use the collar that matches the Combination with Support Units.
This rolled ball screws include collar.

Lead 10

P	Tol.
8~10	0 / -0.009
11·12	0 / -0.011

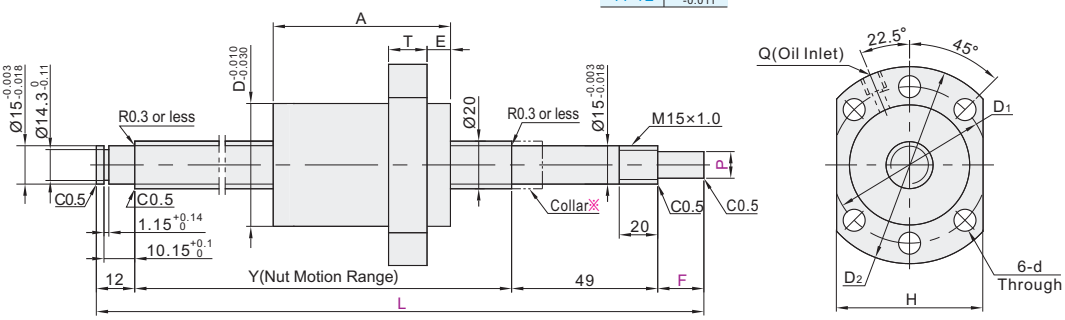

※ Please use the collar that matches the Combination with Support Units.
This rolled ball screws include collar.

Lead 20

P	Tol.
8~10	0 / -0.009
11·12	0 / -0.011

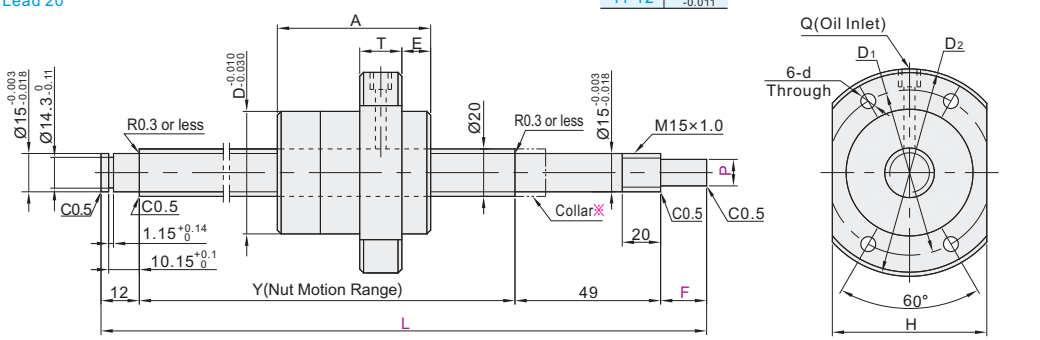

※ Please use the collar that matches the Combination with Support Units.
This rolled ball screws include collar.

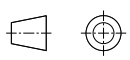
The first perspective

Shaft Dia. 20, Lead 5/10/20

Standard Nut Type

Part Number			1 mm Increment			Ball Dia.	Number of Circuits	Twisting Direction	Y	D	A	T	D_1	D_2	H	d	E	Q	Basic Load Rating (KN)	
Code	Screw Shaft O.D.	Lead	L	F	P														C(Dynamic)	Co(Static)
LCS02	20	5	200~1500	20~36	8~12	3.175	4	Right	L-(61+F)	36	51	10	47	58	44	6.6	–	M6	15.2	37.97
		10					3.8				52						7		14.87	37.59
		20					1.8×2			39	52		50	62	41	5.5	13		12.95	32.56

Combination with Support Units

Code	Screw Shaft O.D.	Lead	Shape	Recommended Fixed Side(Page)	Recommended Support Side (Page)
LCS02	20	5	Round	LEB01-15(P1461)	LEB11-15(P1463)
		10	Square	LEB21-15(P1465)	LEB31-15(P1467)
		20		LEB41-15(P1469)	

Combination with Nut Brackets

Part Number			Nut Brackets	
Code	Screw Shaft O.D.	Lead	Code	No.
LCS02	20	10	LFF01	2010
		20	LFF02	2020
			LFF06	

Optional Processing

Code	Spec.	
LA	**No Machining on Support Side Shaft End** (Support Side) (Fixed Side) 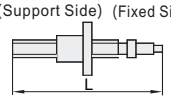	Ordering Code LA
LB	**Ball Nut Orientation Reversed** (Support Side) (Fixed Side) Standard Change 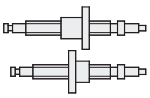	Ordering Code LB
LC	**No Retaining Ring Groove on Support Side Shaft End** (Support Side) 	Ordering Code LC Combination with LE is not available.
LD( )	**Change Support Side Shaft End Machining** (Support Side) 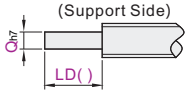	Ordering Code LD20-Q10 1 mm Increment Q is selectable from 10、12.
LE( )	**Change Support Side Shaft End Length** (Support Side) 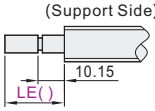	Ordering Code LE20 1 mm Increment LE value range : 13~30. L remains unchanged, Y dimension is shortened.
LN( )	**Tapped Hole on Support Side Shaft End** (Support Side) 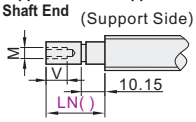	Ordering Code LN20 1 mm Increment LN value range : 21~30. L remains unchanged, Y dimension is shortened. M: M6×1.0, V: 15

Code	Spec.	
LF	**Wrench Flats on Fixed Side** (Fixed Side) 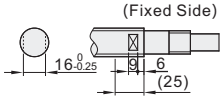 Incomplete Hardened Area	Ordering Code LF Ball bearings will fall out if the ball nut crosses the wrench flats.
LG( )	**Keyway on Fixed Side Shaft End** (Fixed Side) 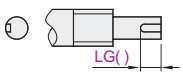	Ordering Code LG15 1 mm Increment Refer to P1414 for Detailed Keyway Dimensions.
LH( )	**Keyway on Fixed Side Shaft End** (Fixed Side) 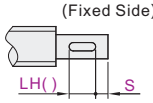	Ordering Code LH7-S2 1 mm Increment Refer to P1414 for Detailed Keyway Dimensions.
LJ( )	**Flat Machined on Fixed Side Shaft End** (Fixed Side) 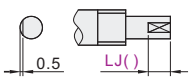	Ordering Code LJ10 1 mm Increment
LK( )	**2 Flats Machined on Fixed Side Shaft End** (Fixed Side) 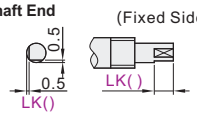 90° Position	Ordering Code LK10 1 mm Increment LK value range : 5 or less.

Please order as shown

Part Number			1 mm Increment		
Code	Screw Shaft O.D.	Lead	L	F	P
LCS02	20	5	200~1500	20~36	8~12
		10			

LCS02—20—5—L300—F30—P10

Discount price

Per	1~4	5~
Price	100%	Additional quotation

Delivery 8

Optional Processing

Part Number			1 mm Increment			Optional Processing Code
Code	Screw Shaft O.D.	Lead	L	F	P	
LCS02	20	5	200~1500	20~36	8~12	LA LB LC LD( ) LE( ) LN( ) LF LG( ) LH( ) LJ( ) LK( )
		10				

LCS02—20—5—L300—F30—P10—LJ10

Code	Type	Accuracy Grade	Material		Heat Treatment		Hardness	
			Screw Shaft	Nut	Screw Shaft	Nut	Screw Shaft	Nut
LCV02	Standard Nut Type	C7	S55C	SCM415H	Induction Hardened	Carburized	58～62HRC	58～62HRC

Yiheda doesn't guarantee the dB value after ball screw assembled.

Processing according to drawings

Lead 5/10

P	Tol.
10	$^{0}_{-0.009}$
11~15	$^{0}_{-0.011}$

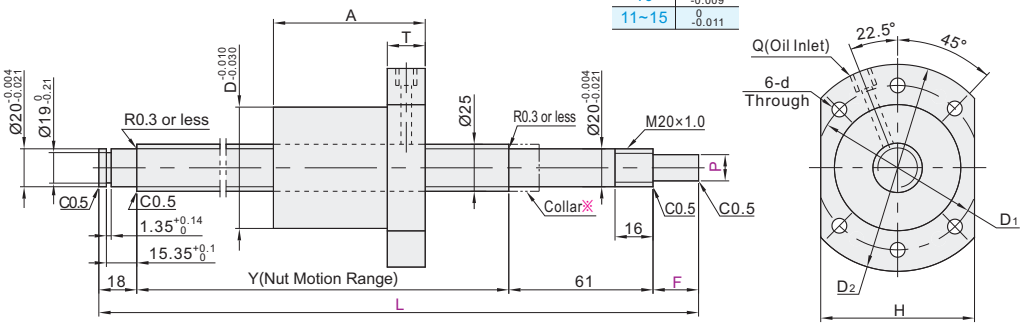

※ Please use the collar that matches the Combination with Support Units.
This rolled ball screws include collar.

Lead 25

P	Tol.
10	$^{0}_{-0.009}$
11~15	$^{0}_{-0.011}$

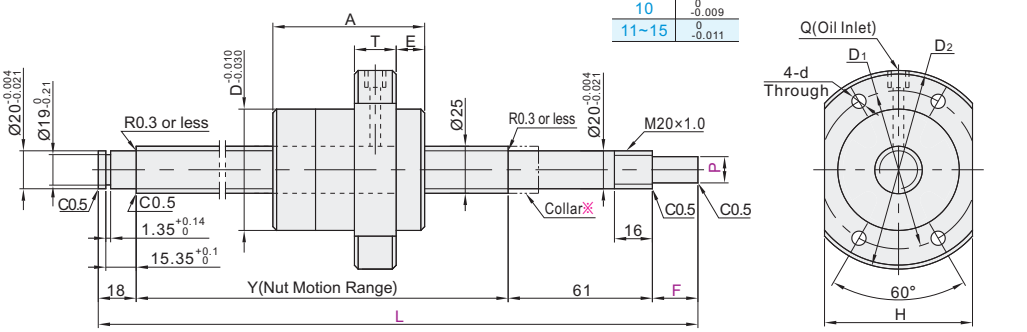

※ Please use the collar that matches the Combination with Support Units.
This rolled ball screws include collar.

The first perspective

Part Number			1 mm Increment			Ball Dia.	Number of Circuits	Twisting Direction	Y	D	A	T	D1	D2	H	d	E	Q	Basic Load Rating (KN)	
Code	Screw Shaft O.D.	Lead	L	F	P														C(Dynamic)	Co(Static)
LCV02	25	5	200~1500	27~45	10~15	3.175	4	Right	L-(79+F)	40	51	10	51	62	48	6.6	–	M6	16.8	48.06
		10	300~1500			6.35					80	12							28.9	71.49
		25				3.969	1.8×2			47	64		60	74	49		15		19.36	50.88

Combination with Support Units

Code	Screw Shaft O.D.	Lead	Shape	Recommended Fixed Side(Page)	Recommended Support Side (Page)
LCV02	25	5 10 25	Round	LEB01-20(P1461)	LEB11-20(P1463)
			Square	LEB21-20(P1465) LEB41-20(P1469)	LEB31-20(P1467)

Combination with Nut Brackets

Part Number			Nut Brackets	
Code	Screw Shaft O.D.	Lead	Code	No.
LCV02	25	25	LFF01 LFF02 LFF06	2525

Please order as shown

Part Number			1 mm Increment		
Code	Screw Shaft O.D.	Lead	L	F	P
LCV02	25	5	200~1500	27~45	10~15
		10	300~1500		

LCV02—25—5—L300—F30—P10

Discount price

Per	1~4	5~
Price	100%	Additional quotation

Delivery 8

Optional Processing

Code	Spec.	
LA	**No Machining on Support Side Shaft End** (Support Side) (Fixed Side) 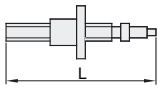	Ordering Code LA
LB	**Ball Nut Orientation Reversed** (Support Side) (Fixed Side) Standard Changed 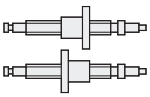	Ordering Code LB
LC	**No Retaining Ring Groove on Support Side Shaft End** (Support Side) 	Ordering Code LC Combination with LE is not available.
LD( )	**Change Support Side Shaft End Machining** (Support Side) 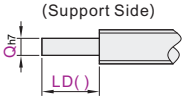	Ordering Code LD20-Q10 1 mm Increment Q is selectable from 10, 12,15
LE( )	**Change Support Side Shaft End Length** (Support Side) 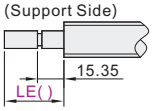	Ordering Code LE20 1 mm Increment LE value range : 19~60. L remains unchanged, Y dimension is shortened.
LN( )	**Tapped Hole on Support Side Shaft End** (Support Side) 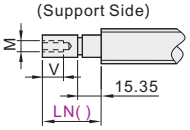	Ordering Code LN30 1 mm Increment LN value range : 28~60. L remains unchanged, Y dimension is shortened. M: M8×1.25, V: 20

Code	Spec.	
LF	**Wrench Flats on Fixed Side** (Fixed Side) 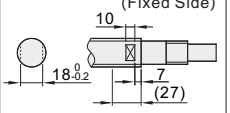 Incomplete Hardened Area	Ordering Code LF The processing of wrench groove will shorten the screw rod stroke. Ball bearings will fall out if the ball nut crosses the wrench flats.
LG( )	**Keyway on Fixed Side Shaft End** (Fixed Side) 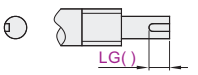	Ordering Code LG20 Refer to P1414 for Detailed Keyway Dimensions.
LH( )	**Keyway on Fixed Side Shaft End** (Fixed Side) 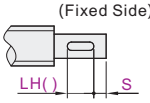	Ordering Code LH20-S3 1 mm Increment Refer to P1414 for Detailed Keyway Dimensions.
LJ( )	**Flat Machined on Fixed Side Shaft End** (Fixed Side) 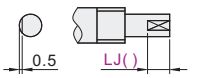	Ordering Code LJ20 1 mm Increment
LK( )	**2 Flats Machined on Fixed Side Shaft End** (Fixed Side) 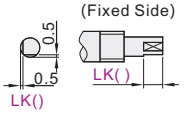 90° Position	Ordering Code LK5 1 mm Increment LK value range : 5 or less

Optional Processing

Please order as shown

Part Number			1 mm Increment			Optional Processing Code
Code	Screw Shaft O.D.	Lead	L	F	P	
LCV02	25	5	200~1500	27~45	10~15	LA LB LC...
		10	300~1500			

LCV02—25—5—L300—F30—P10—LB

Code	Type	Accuracy Grade	Material		Heat Treatment		Hardness	
			Screw Shaft	Nut	Screw Shaft	Nut	Screw Shaft	Nut
LCY02	Standard Nut Type	C7	S55C	SCM415H	Induction Hardened	Carburized	58～62HRC	58～62HRC

Yiheda doesn't guarantee the dB value after ball screw assembled.

Lead 5/10

P	Tol.
11~18	0 / -0.011
19~20	0 / -0.013

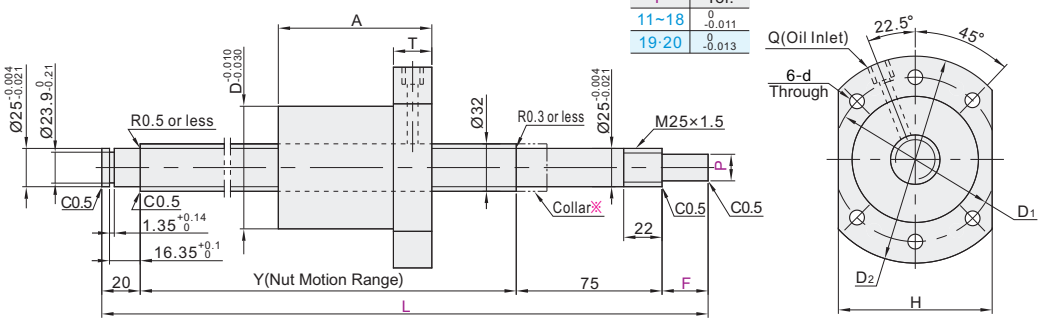

※ Please use the collar that matches the Combination with Support Units.
This rolled ball screws include collar.

Lead 32

P	Tol.
11~18	0 / -0.011
19~20	0 / -0.013

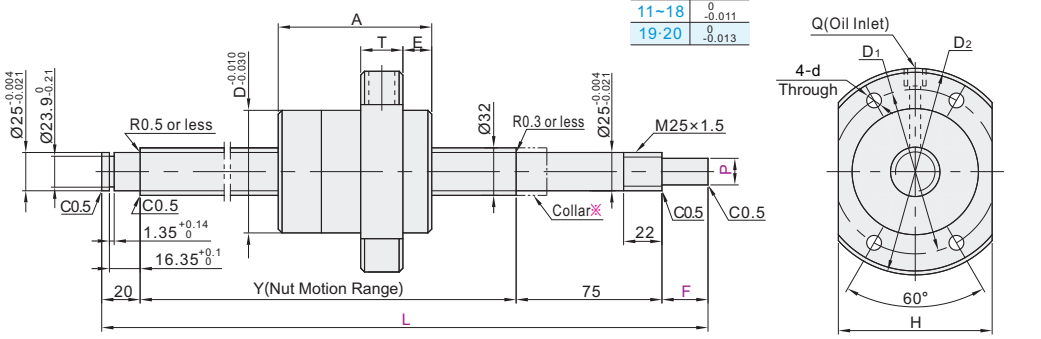

※ Please use the collar that matches the Combination with Support Units.
This rolled ball screws include collar.

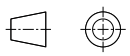
The first perspective

Part Number			1 mm Increment			Ball Dia.	Number of Circuits	Twisting Direction	Y	D	A	T	D1	D2	H	d	E	Q	Basic Load Rating (KN)	
Code	Screw Shaft O.D.	Lead	L	F	P														C(Dynamic)	Co(Static)
LCY02	32	5	300~1500	33~60	11~20	3.175	4	Right	L-(95+F)	50	52	12	65	80	62	9	–	M6	18.83	62.16
		10				6.35					85								47.08	119.60
		32				4.762	1.8×2			58	78		74	92	60		17		28.20	80.48

Combination with Support Units

Code	Screw Shaft O.D.	Lead	Shape	Recommended Fixed Side (Page)	Recommended Support Side (Page)
LCY02	32	5	Round	LEB01-25 (P1461)	LEB11-25 (P1463)
		10			
		32	Square	LEB41-25 (P1469)	LEB31-25 (P1467)

Combination with Nut Brackets

Part Number			Nut Brackets	
Code	Screw Shaft O.D.	Lead	Code	No.
LCY02	32	32	LFF01 LFF02 LFF06	3232


Please order as shown

Part Number			1 mm Increment		
Code	Screw Shaft O.D.	Lead	L	F	P
LCY02	32	5 10 32	300~1500	33~60	11~20

LCY02—32—10—L1000—F50—P15

Discount price

Per	1~4	5~
Price	100%	Additional quotation


Delivery 8

Optional Processing

Code	Spec.	
LA	**No Machining on Support Side Shaft End** (Support Side) (Fixed Side) 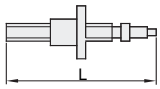	Ordering Code LA
LB	**Ball Nut Orientation Reversed** (Support Side) (Fixed Side) Standard Changed 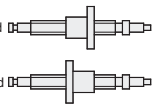	Ordering Code LB
LC	**No Retaining Ring Groove on Support Side Shaft End** (Support Side) 	Ordering Code LC Combination with LE is not available.
LD( )	**Change Support Side Shaft End Machining** (Support Side) 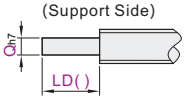	Ordering Code LD20-Q10 1 mm Increment Q is selectable from 10, 12, 15, 20.
LE( )	**Change Support Side Shaft End Length** (Support Side) 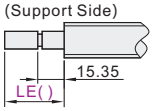	Ordering Code LE15 1 mm Increment LE value range : 13~30. L remains unchanged, Y dimension is shortened.
LN( )	**Tapped Hole on Support Side Shaft End** (Support Side) 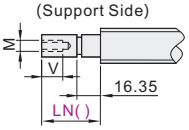	Ordering Code LN30 1 mm Increment LN value range : 28~60. L remains unchanged, Y dimension is shortened. M: M8×1.25, V: 20

Code	Spec.	
LF	**Wrench Flats on Fixed Side** (Fixed Side) 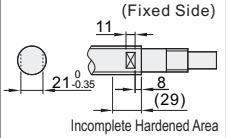	Ordering Code LF The processing of wrench groove will shorten the screw rod stroke. Ball bearings will fall out if the ball nut crosses the wrench flats.
LG( )	**Keyway on Fixed Side Shaft End** (Fixed Side) 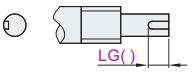	Ordering Code LG20 1 mm Increment Refer to P1414 for Detailed Keyway Dimensions.
LH( )	**Keyway on Fixed Side Shaft End** (Fixed Side) 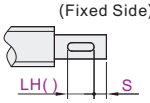	Ordering Code LH20-S3 1 mm Increment Refer to P1414 for Detailed Keyway Dimensions.
LJ( )	**Flat Machined on Fixed Side Shaft End** (Fixed Side) 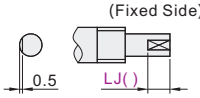	Ordering Code LJ20 1 mm Increment
LK( )	**2 Flats Machined on Fixed Side Shaft End** (Fixed Side) 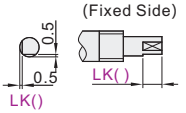 Position 90°	Ordering Code LK5 1 mm Increment LK value range : 5 or less

◉ Optional Processing

Please order as shown

Part Number			1 mm Increment			Optional Processing Code
Code	Screw Shaft O.D.	Lead	L	F	P	
LCY02	32	5 10 32	300~1500	33~60	11~20	LA LB LC LD( ) LE( ) LN( ) LF LG( ) LH( ) LJ( ) LK( )

LCY02 — 32 — 10 — L800 — F40 — P15 — LH10-S2

Code	Type	Accuracy Grade	Material		Heat Treatment		Hardness	
			Screw Shaft	Nut	Screw Shaft	Nut	Screw Shaft	Nut
LCH31	Standard Nut Type	C5	S55C	SCM415H	Induction Hardened	Carburized	56~62HRC	56~62HRC

Yiheda doesn't guarantee the dB value after ball screw assembled.

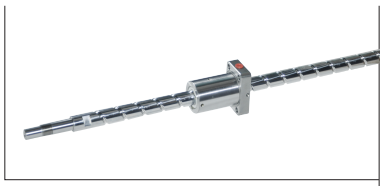

Processing according to drawings

Shaft Dia. 12 , Lead 5

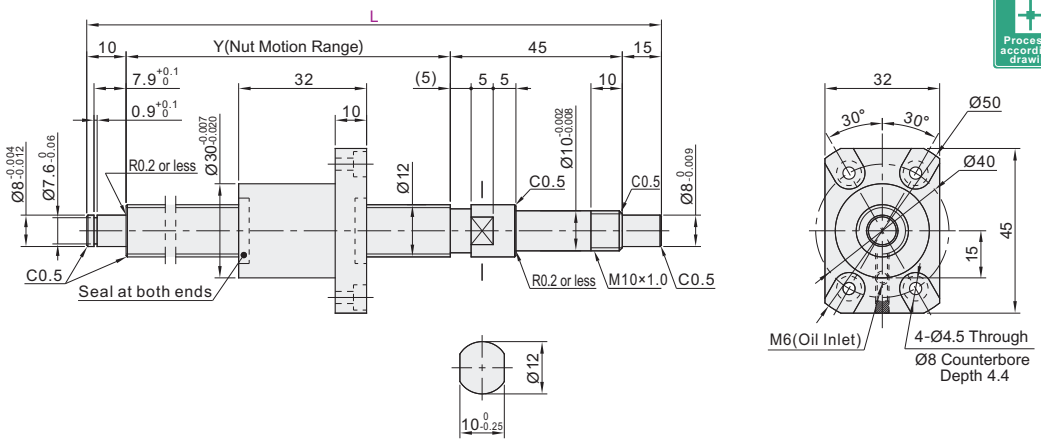

Shaft Dia. 12 , Lead 10

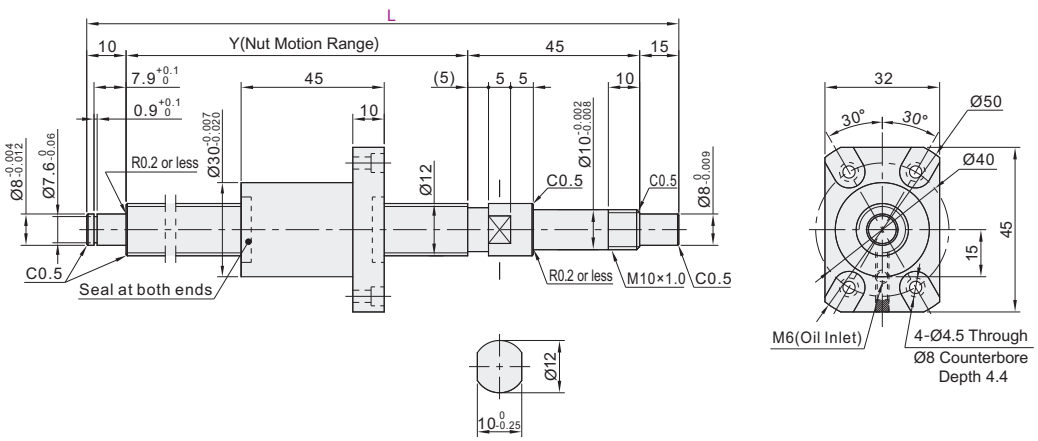

Shaft Dia. 12 , Lead 20

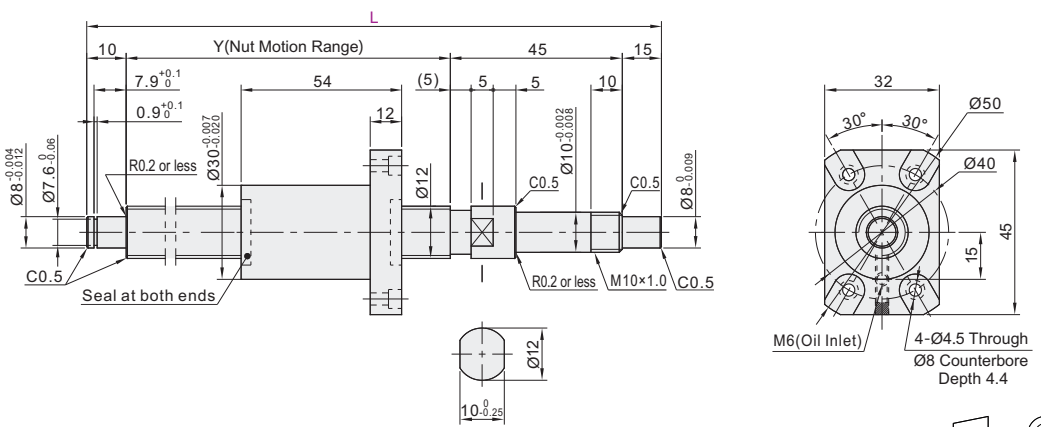

The first perspective

Part Number			1 mm Increment	Accuracy Grade	Number of Circuits	Twisting Direction	Axial Clearance	Y	Basic Load Rating (Kgf)	
Code	Screw Shaft O.D.	Lead	L						C(Dynamic)	Co(Static)
LCH31	12	5	150~700	C5	3	Right	C5T (0.005mm or less)	L-70	610	1190
		10							590	1160
		20							390	770

Optional Processing

Code	Spec.	
LA	**No Machining on Support Side Shaft End** (Support Side) (Fixed Side) 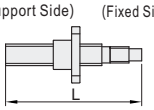 	Ordering Code LA
LB	**Ball Nut Orientation Reversed** (Support Side) (Fixed Side) Standard Change 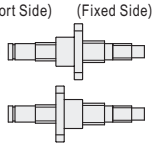	Ordering Code LB
LC	**No Retaining Ring Groove on Support Side Shaft End** (Support Side) 	Ordering Code LC
LD( )	**Change Support Side Shaft End Machining** (Support Side) 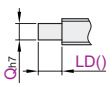 	Ordering Code LD20-Q6 1 mm Increment Q is selectable from 6. L remains unchanged, Y dimension is shortened.
LE( )	**Change Support Side Shaft End Length** (Support Side) 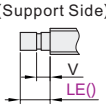 	Ordering Code LE15 1 mm Increment L remains unchanged, Y dimension is shortened. Size / V / LE Range 1205 / 6.8 / 10≤LE≤20 1210, 1220 / 7.9 / 11≤LE≤20

Code	Spec.	
LG( )	**Keyway on Fixed Side Shaft End** 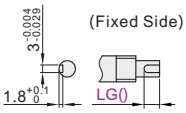 	Ordering Code LG8 1 mm Increment Keyway width b < LG≤15
LH( )	**Keyway on Fixed Side Shaft End** 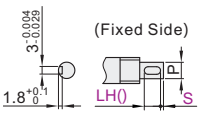 	Ordering Code LH5-S2 1 mm Increment LH+S≤15, Keyway width b < LH
LJ( )	**Flat Machined on Fixed Side Shaft End** (Fixed Side) 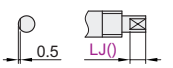 	Ordering Code LJ10 1 mm Increment 5≤LJ≤15
LP( ) LQ( )	**2 Flats Machined on Fixed Side Shaft End** 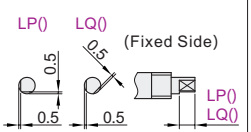 	Ordering Code LP10 1 mm Increment LP: 90° Positon LQ: 120° Positon 5≤LP, LQ≤15

Please order as shown

Part Number			1 mm Increment	Accuracy Grade
Code	Screw Shaft O.D.	Lead	L	
LCH31	12	5	150~450	C5
		10	200~600	

LCH31—12—5—L200

Optional Processing

Part Number			1 mm Increment	Accuracy Grade	Optional Processing Code
Code	Screw Shaft O.D.	Lead	L		
LCH31	12	5	150~450	C5	LA LB LC LD( ) LE( ) LG( ) LH( ) LJ( ) LP( ) LQ( )
		10	200~600		

LCH31—12—5—L200—LC

Discount price

Per	1~5	6~
Price	100%	Additional quotation

Delivery 10

Code	Type	Accuracy Grade	Material		Heat Treatment		Hardness	
			Screw Shaft	Nut	Screw Shaft	Nut	Screw Shaft	Nut
LCL31	Standard Nut Type	C5	S55C	SCM415H	Induction Hardened	Carburized	56~62HRC	56~62HRC

Yiheda doesn't guarantee the dB value after ball screw assembled.

Shaft Dia. 15·Lead 5

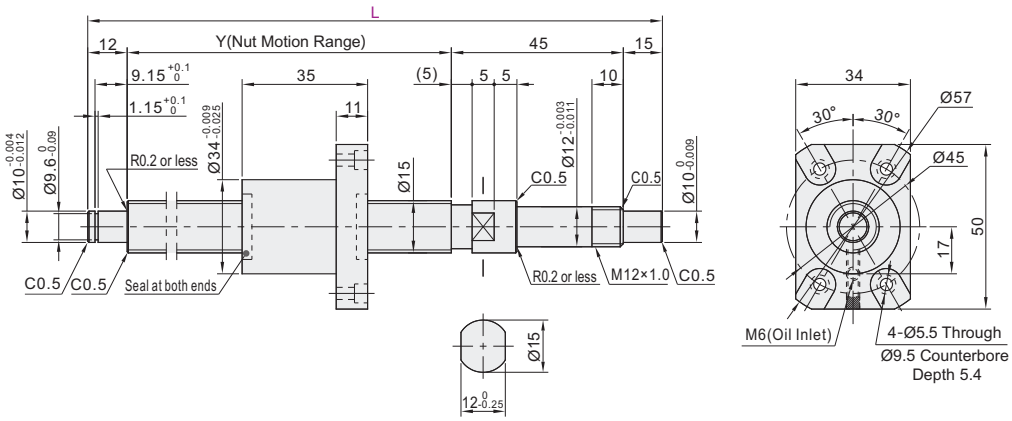

Shaft Dia. 15·Lead 10

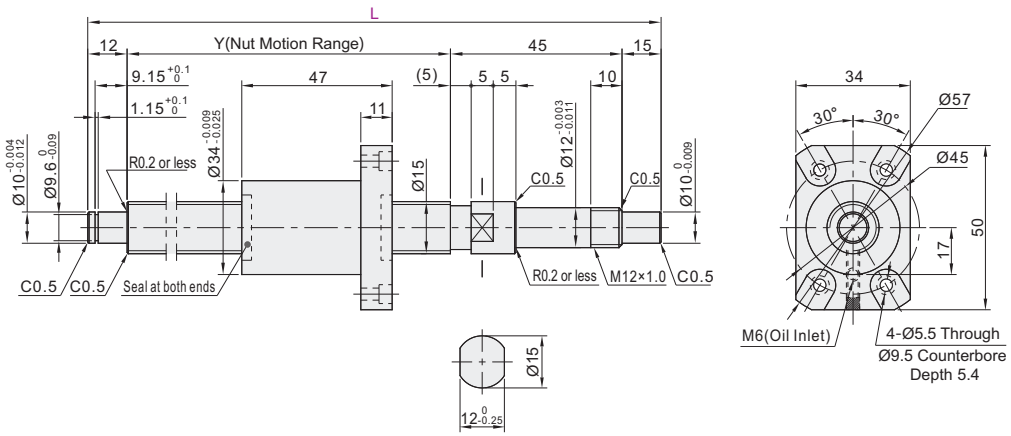

Shaft Dia. 15·Lead 20

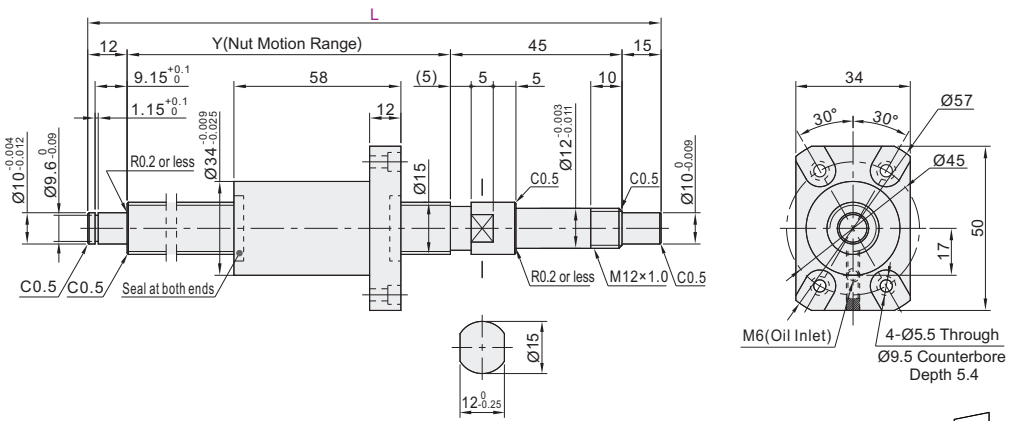

The first perspective

Part Number			1 mm Increment	Accuracy Grade	Number of Circuits	Twisting Direction	Axial Clearance	Y	Rated Load (Kgf)	
Code	Screw Shaft O.D.	Lead	L						C(Dynamic)	Co(Static)
LCL31	15	5	150~1100	C5	3	Right	C5T (0.005mm or less)	L-72	850	1640
		10							840	1610
		20			2				560	1150

Optional Processing

Code	Spec.	
LA	**No Machining on Support Side Shaft End** (Support Side) (Fixed Side) 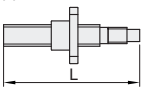	Ordering Code LA
LB	**Ball Nut Orientation Reversed** (Support Side) (Fixed Side) Standard Change 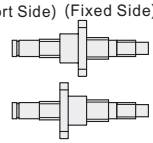	Ordering Code LB
LC	**No Retaining Ring Groove on Support Side Shaft End** (Support Side) 	Ordering Code LC
LD( )	**Change Support Side Shaft End Machining** (Support Side) 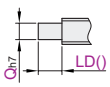	Ordering Code LD20-Q8 1 mm Increment Q is selectable from 8, 12. L remains unchanged, Y dimension is shortened.
LE( )	**Change Support Side Shaft End Lengh** (Support Side) 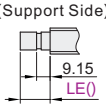	Ordering Code LE15 1 mm Increment LE value range : 13~30. L remains unchanged, Y dimension is shortened.

Code	Spec.	
LN( )	**Tapped Hole on Support Side Shaft End** (Support Side) 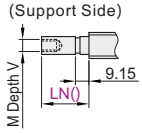	Ordering Code LN20 1 mm Increment LN value range :18~30. L remains unchanged, Y dimension is shortened. M: M5×0.8 V: 12
LG( )	**Keyway on Fixed Side Shaft End** (Fixed Side) 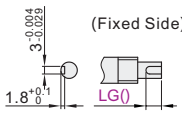	Ordering Code LG8 1 mm Increment 3 < LG ≤ 15
LH( )	**Keyway on Fixed Side Shaft End** (Fixed Side) 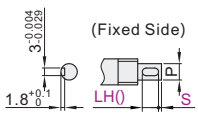	Ordering Code LH5-S2 1 mm Increment 3 < LH LH + S ≤ 15
LJ( )	**Flat Machined on Fixed Side Shaft End** (Fixed Side) 	Ordering Code LJ10 1 mm Increment 5 ≤ LJ ≤ 15
LP( ) LQ( )	**2 Flats Machined on Fixed Side Shaft End** LP() LQ() (Fixed Side) 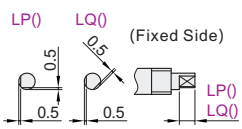	Ordering Code LP10 1 mm Increment LP: 90° Positon LQ: 120° Positon 5 ≤ LP、LQ ≤ 15

Please order as shown

Part Number			1 mm Increment	Accuracy Grade
Code	Screw Shaft O.D.	Lead	L	
LCL31	15	5	150~1095	C5
		10	200~1095	

LCL31—15—5—L200

Optional Processing

Part Number			1 mm Increment	Accuracy Grade	Optional Processing Code
Code	Screw Shaft O.D.	Lead	L		
LCL31	15	5	150~1095	C5	LA LB LC LD( ) LE( ) LN( ) LG( ) LH( ) LJ( ) LP( ) LQ( )
		10	200~1095		

LCL31—15—5—L200—LC

Discount price

Per	1~5	6~
Price	100%	Additional quotation

Delivery 10

Code	Type	Accuracy Grade	Material		Heat Treatment		Hardness	
			Screw Shaft	Nut	Screw Shaft	Nut	Screw Shaft	Nut
LCS31	Standard Nut Type	C5	S55C	SCM415H	Induction Hardened	Carburized	56~62HRC	56~62HRC

Yiheda doesn't guarantee the dB value after ball screw assembled.

Shaft Dia. 20 ·Lead 5

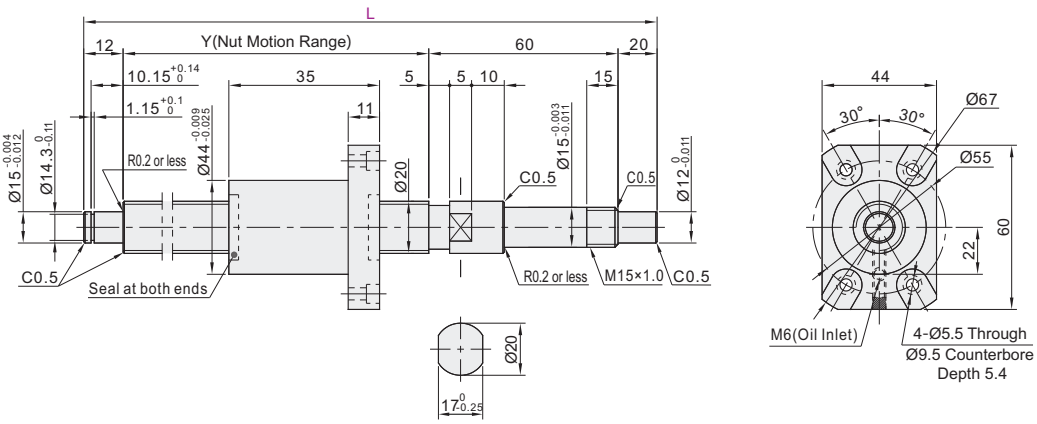

Shaft Dia. 20 ·Lead 10

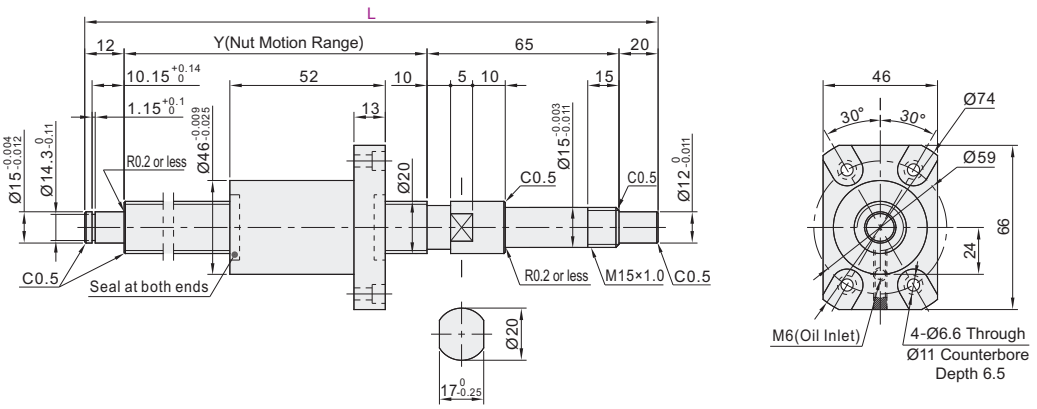

Shaft Dia. 20 ·Lead 20

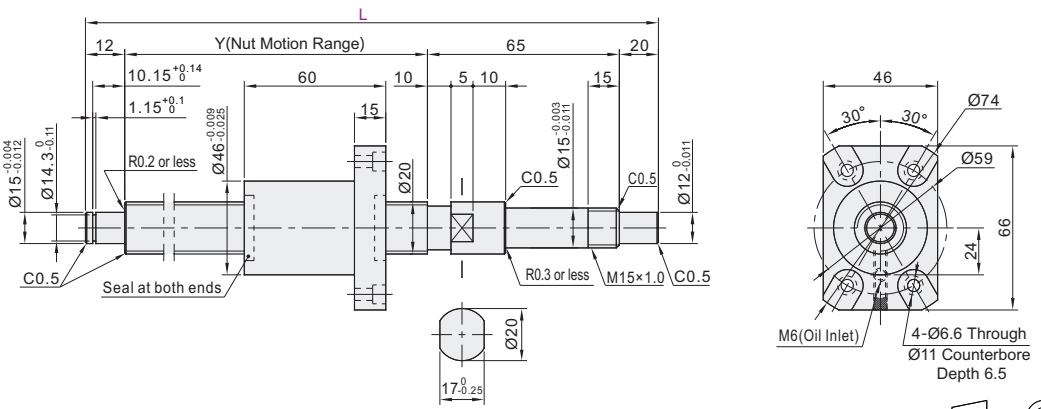

The first perspective

Shaft Dia. 20, Lead 5/10/20

Standard Nut Type

Part Number			1 mm Increment	Accuracy Grade	Number of Circuits	Twisting Direction	Axial Clearance	Y	Rated Load (Kgf)	
Code	Screw Shaft O.D.	Lead	L						C(Dynamic)	Co(Static)
LCS31	20	5	200~2000	C5	3.8	Right	C5T (0.005mm or less)	L-92	1000	2240
		10						L-97	1530	3280
		20			1.8				1040	2170

Optional Processing

Code	Spec.	
LA	**No Machining on Support Side Shaft End** (Support Side) (Fixed Side) L	Ordering Code LA
LB	**Ball Nut Orientation Reversed** (Support Side) (Fixed Side) Standard Change	Ordering Code LB
LC	**No Retaining Ring Groove on Support Side Shaft End** (Support Side)	Ordering Code LC
LD( )	**Change Support Side Shaft End Machining** (Support Side) Qh7 LD()	Ordering Code LD20-Q10 1 mm Increment Q is selectable from 10, 12. L remains unchanged, Y dimension is shortened.
LE( )	**Change Support Side Shaft End Length** (Support Side) 10.15 LE()	Ordering Code LE20 1 mm Increment LE value range : 13~30. L remains unchanged, Y dimension is shortened.

Code	Spec.	
LN( )	**Tapped Hole on Support Side Shaft End** (Support Side) M Depth V 10.15 LN()	Ordering Code LN20 1 mm Increment LN value range :21~30. L remains unchanged, Y dimension is shortened. M: M6×1.0, V: 15
LG( )	**Keyway on Fixed Side Shaft End** (Fixed Side) $4^{0}_{-0.030}$ $2.5^{+0.1}_{0}$ LG()	Ordering Code LG8 1 mm Increment 4 < LG≤20
LH( )	**Keyway on Fixed Side Shaft End** (Fixed Side) $4^{0}_{-0.030}$ $2.5^{+0.1}_{0}$ LH() P S	Ordering Code LH5-S5 1 mm Increment 4 < LH LH+S≤20
LJ( )	**Flat Machined on Fixed Side Shaft End** (Fixed Side) 0.5 LJ()	Ordering Code LJ10 1 mm Increment 5≤LJ≤20
LP( ) LQ( )	**2 Flats Machined on Fixed Side Shaft End** LP() LQ() (Fixed Side) 0.5 0.5 0.5 0.5 LP() LQ()	Ordering Code LP10 1 mm Increment LP: 90° Positon LQ: 120° Positon 5≤LP,LQ≤20

Please order as shown

Part Number			1 mm Increment	Accuracy Grade
Code	Screw Shaft O.D.	Lead	L	
LCS31	20	5	200~1000	C5
		10	250~1500	

LCS31—20—5—L200

Optional Processing

Part Number			1 mm Increment	Accuracy Grade	Optional Processing Code
Code	Screw Shaft O.D.	Lead	L		
LCS31	15	5	200~1000	C5	LA LB LC LD( ) LE( ) LN( ) LG( ) LH( ) LJ( ) LP( ) LQ( )
		10	250~1500		

LCS31—15—5—L200—LC

Discount price

Per	1~5	6~
Price	100%	Additional quotation

Delivery 10

Shaft Dia. 25, Lead 5/10

Standard Nut Type

Code	Type	Accuracy Grade	Material		Heat Treatment		Hardness	
			Screw Shaft	Nut	Screw Shaft	Nut	Screw Shaft	Nut
LCV31	Standard Nut Type	C5	S55C	SCM415H	Induction Hardened	Carburized	56~62HRC	56~62HRC

Yiheda doesn't guarantee the dB value after ball screw assembled.

Shaft Dia.25·Lead 5

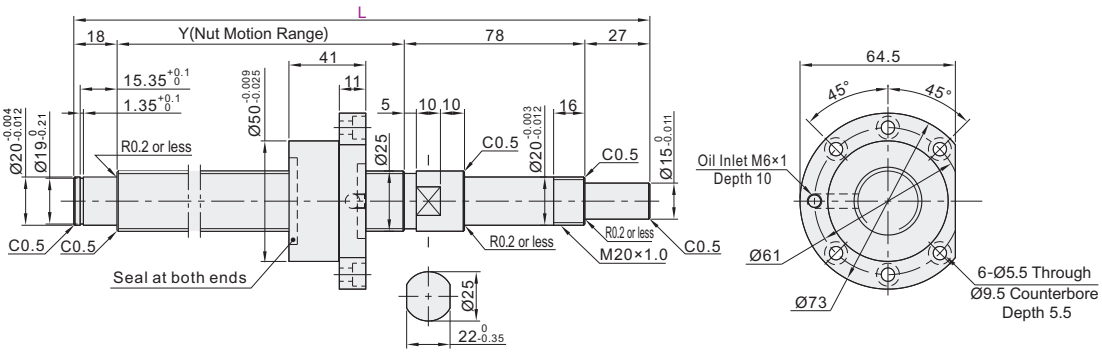

Shaft Dia. 25·Lead 10

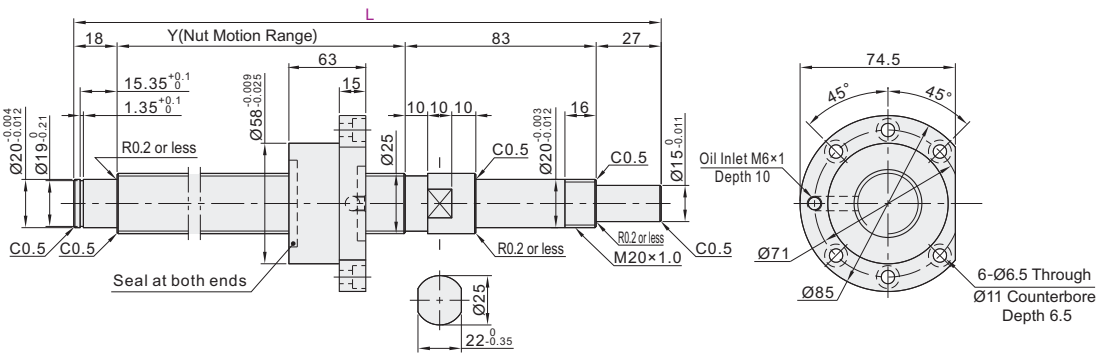

The first perspective

Part Number			1 mm Increment	Accuracy Grade	Number of Circuits	Twisting Direction	Axial Clearance	Y	Rated Load (Kgf)	
Code	Screw Shaft O.D.	Lead	L						C(Dynamic)	Co(Static)
LCV31	25	5	200~1300	C5	4	Right	C5T (0.005mm or less)	L-123	2880	3870
		10	200~1500					L-128	3880	6870

Please order as shown

Part Number			1 mm Increment
Code	Screw Shaft O.D.	Lead	L
LCV31	25	5	200~1300
		10	200~1500

LCV31 — 25 — 10 — L200

Discount price

Per	1~5	6~
Price	100%	Additional quotation

Delivery 10

Optional Processing

Code	Spec.	
LA	**No Machining on Support Side Shaft End** (Support Side) (Fixed Side) 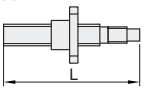	Ordering Code LA
LB	**Ball Nut Orientation Reversed** (Support Side) (Fixed Side) Standard Change 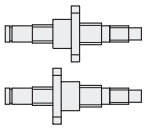	Ordering Code LB
LC	**No Retaining Ring Groove on Support Side Shaft End** (Support Side) 	Ordering Code LC
LD( )	**Change Support Side Shaft End Machining** (Support Side) 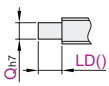	Ordering Code LD20-Q10 1 mm Increment Q is selectable from 10, 12, 15 L remains unchanged, Y dimension is shortened.
LE( )	**Change Support Side Shaft End Length** (Support Side) 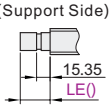	Ordering Code LE20 1 mm Increment LE value range : 19~60. L remains unchanged, Y dimension is shortened.

Code	Spec.	
LN( )	**Tapped Hole on Support Side Shaft End** (Support Side) 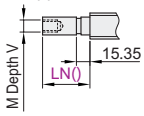	Ordering Code LN20 1 mm Increment LN value range :28~60. L remains unchanged, Y dimension is shortened. M: M8×1.25, V: 20
LG( )	**Keyway on Fixed Side Shaft End** (Fixed Side) 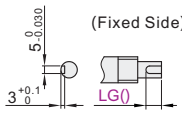	Ordering Code LG8 1 mm Increment 5 < LG≤27
LH( )	**Keyway on Fixed Side Shaft End** (Fixed Side) 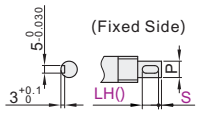	Ordering Code LH5-S2 1 mm Increment 5 < LH LH+S≤27
LJ( )	**Flat Machined on Fixed Side Shaft End** (Fixed Side) 	Ordering Code LJ10 1 mm Increment 5≤LJ≤27
LP( ) LQ( )	**2 Flats Machined on Fixed Side Shaft End** LP() LQ() (Fixed Side) 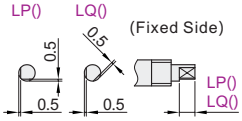	Ordering Code LP10 1 mm Increment LP: 90° Positon LQ: 120° Positon 5≤LP,LQ≤27

Please order as shown

Optional Processing

Part Number			1 mm Increment	Accuracy Grade	Optional Processing Code
Code	Screw Shaft O.D.	Lead	L		
LCV31	25	5	200~1800	C5	LA LB LC LD( ) LE( ) LN( ) LG( ) LH( ) LJ( ) LP( ) LQ( )
		10	200~1500		

LCV31—25—5—L200—LC